KURZBESCHREIBUNG DER BEDIENELEMENTE

1	Anodenanschlußbuchse
2	Betriebsanzeige
3	Netzschalter
4	Netzsicherung
5	Fokus Anzeige
6	Anschlußbuchse
7	Regeneriertaste
8	Regenerieranzeige
9	Regenerierstromumschalter
10	Life Test Taste
11	Tracking Taste
12	G_1 - Spannungsumschalter
13	Schlußbeseitigungstaste
14	Schlußbeseitigungsschalter
15	Schlußmessungstaste
16	Heizspannungswahlschalter
17	G_1 - Variable - Schalter
18	Cut off - Schalter
19	Emission - Test - Schalter
20	R - G - B - Wahlschalter
21	Schlußanzeige
22	G_2 - Spannungsumschalter
23	Cut off - Regler
24	G_1 - Spannungsregler

25	Tracking - Regler
26	Anzeigeinstrumente
27	Adapterfach
28	Anschlußkabel
29	Anodenkabel
30	Netzkabel

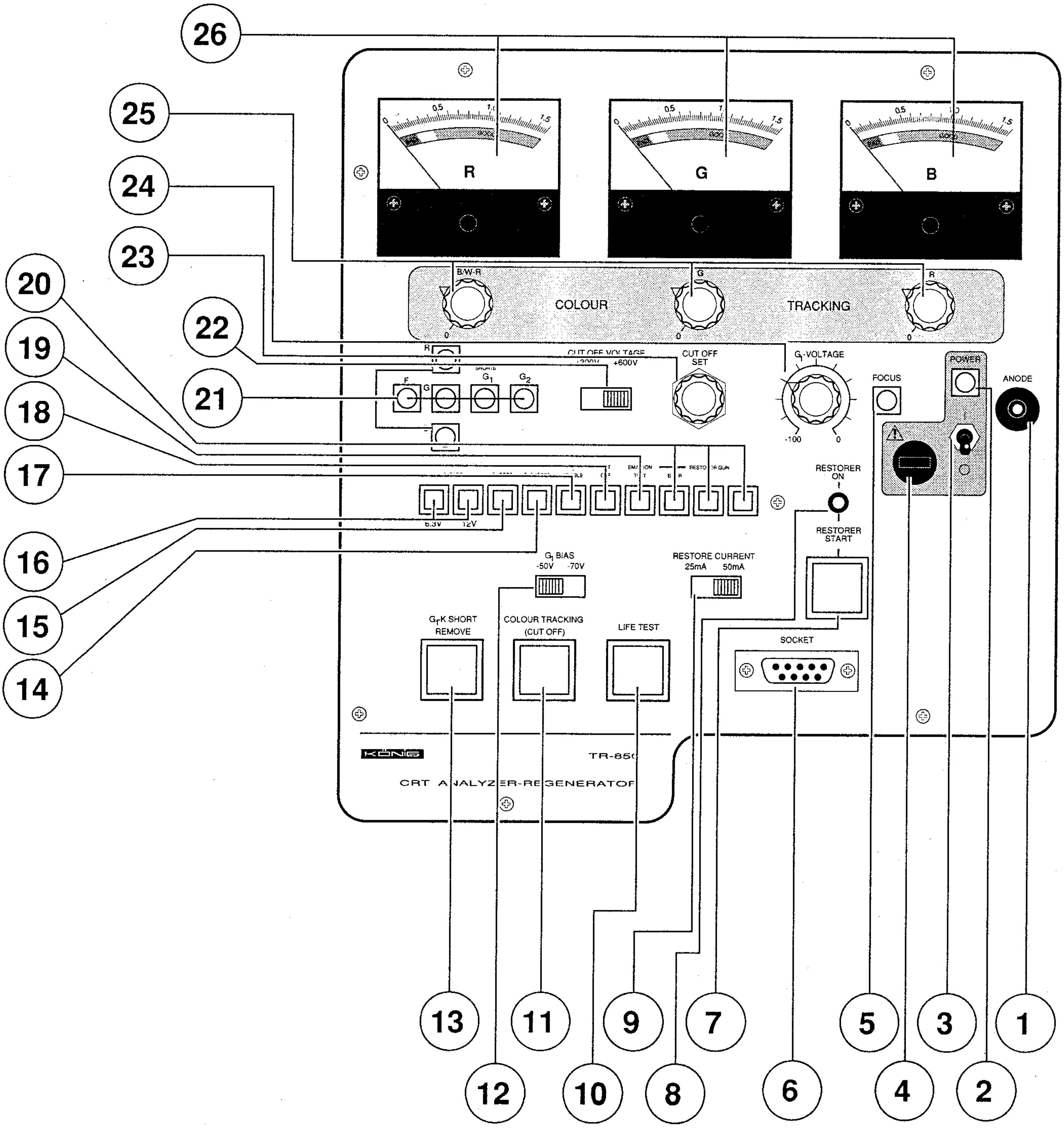
26
25
24
23
22
21
20
19
18
17
16
15
14
0.5
1.0
1.5
R
G
B
B/W-R
G
R
COLOUR
TRACKING
0
CUT OFF VOLTAGE
+600V
CUT OFF
SET
G1-VOLTAGE
-100
0
FOCUS
POWER
ANODE
R
F
G
G1
G2
EMISSION
RESTORER GUN
6.3V
12V
RESTORER
ON
RESTORER
START
G1 BIAS
-50V
-70V
RESTORE CURRENT
25mA
50mA
G1-K SHORT
REMOVE
COLOUR TRACKING
(CUT OFF)
LIFE TEST
SOCKET
KÖNIG
TR-850
CRT ANALYZER-REGENERATOR
13
11
9
7
5
3
1
12
10
8
6
4
2

Bedienelemente

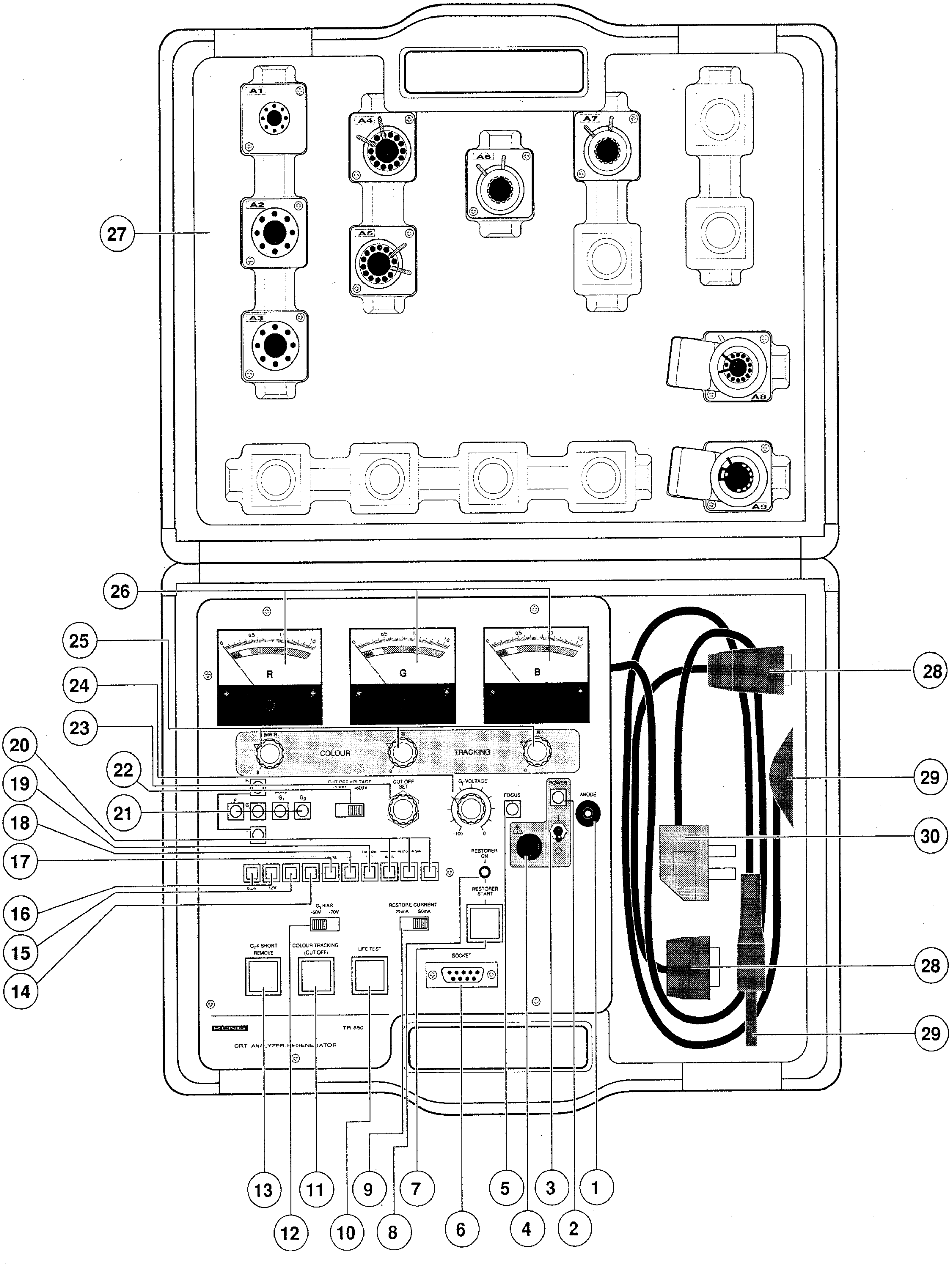
A1
A2
A3
A4
A5
A6
A7
A8
A9
27
26
25
24
23
22
21
20
19
18
17
16
15
14
28
29
30
28
29
R
G
B
B-W-R
G
R
COLOUR
TRACKING
CUT OFF VOLTAGE
-250V
-600V
CUT OFF SET
G1-VOLTAGE
-100
0
FOCUS
POWER
ANODE
F
G
G1
G2
RESTORER ON
RESTORER START
6.3V
12V
G1 BIAS
-50V
-70V
RESTORE CURRENT
25mA
50mA
G1-K SHORT REMOVE
COLOUR TRACKING (CUT OFF)
LIFE TEST
SOCKET
KÖNIG
TR-850
CRT ANALYZER-REGENERATOR
13
11
9
7
5
3
1
12
10
8
6
4
2

Bedienelemente

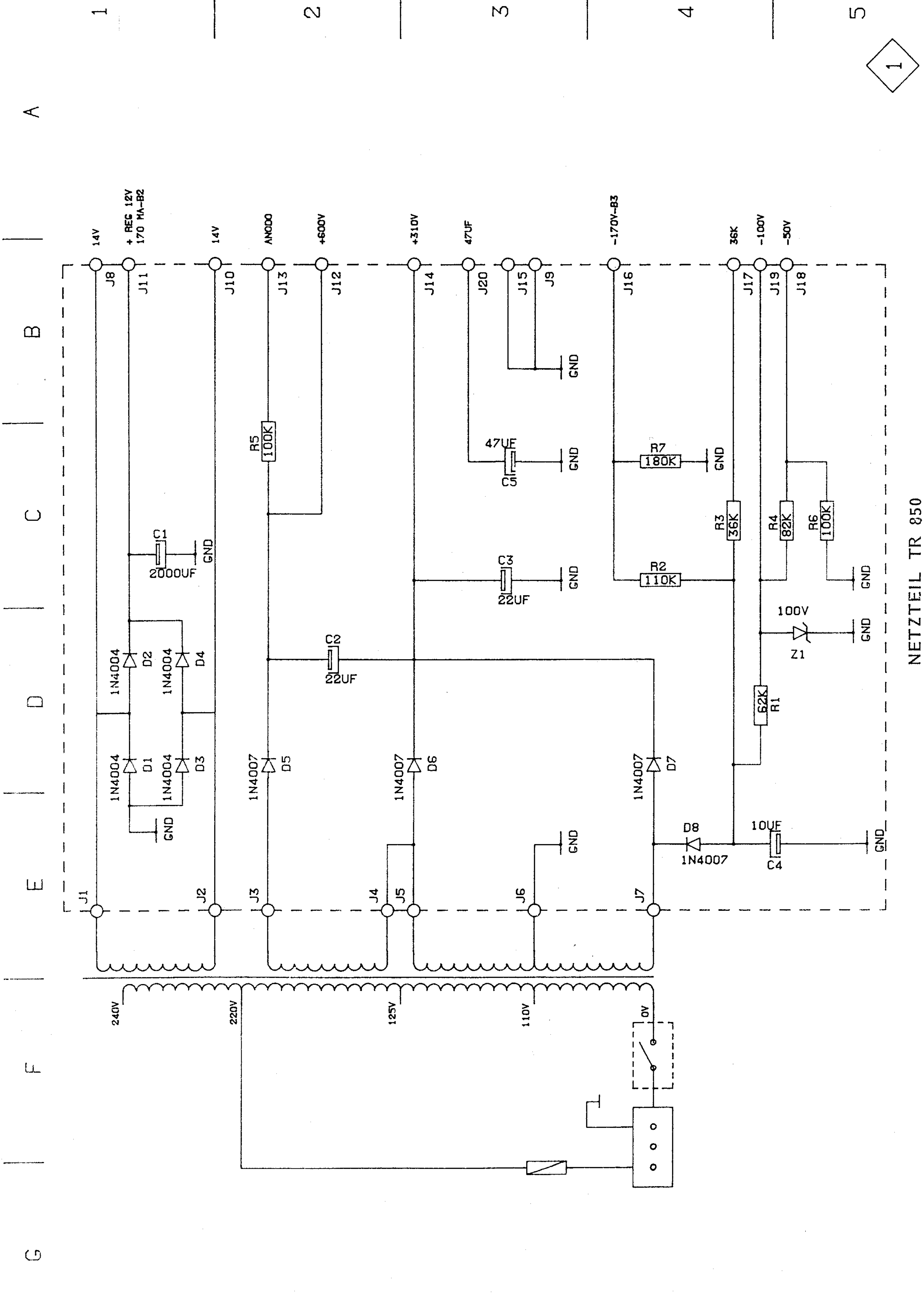
NETZTEIL TR 850
1
2
3
4
5
A
B
C
D
E
F
G
14V
+ REG 12V
170 MA-B2
14V
ANODO
+600V
+310V
47UF
-170V-B3
36K
-100V
-50V
J8
J11
J10
J13
J12
J14
J20
J15
J9
J16
J17
J19
J18
GND
R5
100K
47UF
C5
R7
180K
C1
2000UF
R3
36K
R4
82K
R6
100K
C3
22UF
R2
110K
100V
Z1
C2
22UF
D2
D4
1N4004
D1
D3
R1
62K
1N4007
D5
D6
D7
D8
10UF
C4
J1
J2
J3
J4
J5
J6
J7
240V
220V
125V
110V
0V

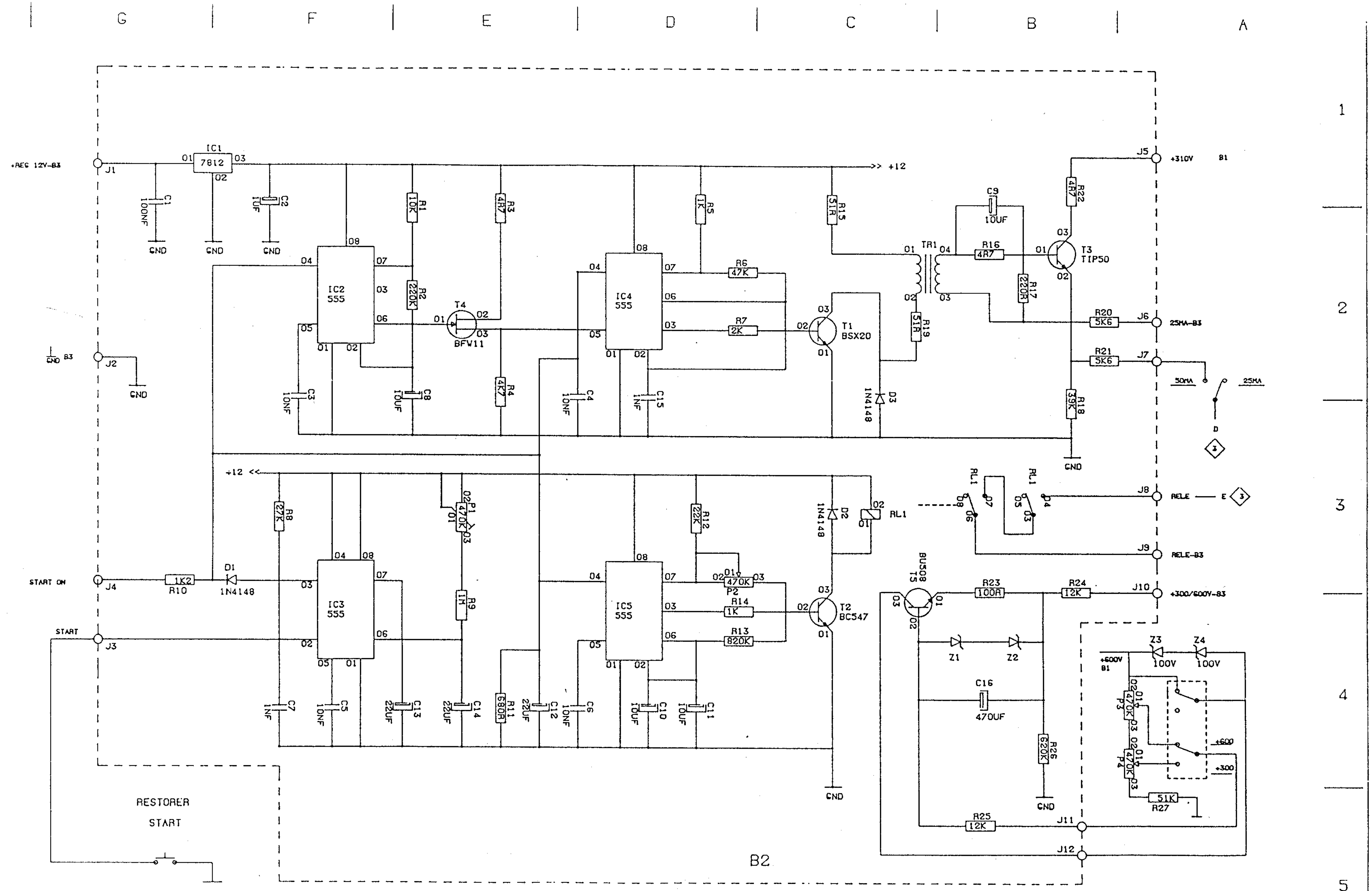
G
F
E
D
C
B
A
1
2
3
4
+REG 12V-B3
J1
IC1
7812
C1
100NF
C2
1UF
GND
J2
GND B3
J4
START ON
R10
1K2
D1
1N4148
J3
START
RESTORER
START
IC2
555
IC3
555
IC4
555
IC5
555
R1
10K
R2
220K
R3
4R7
R4
4K7
T4
BFV11
C3
10NF
C8
10UF
C4
10NF
C15
1NF
R5
1K
R6
47K
R7
2K
T1
BSX20
D3
1N4148
R15
51R
TR1
R19
51R
R16
4R7
C9
10UF
R17
220R
T3
TIP50
R22
4R7
J5
+310V
B1
J6
25MA-B3
R20
5K6
J7
R21
5K6
50MA
25MA
R18
39K
D
+12
+12 <<
R8
27K
P1
470K
R9
1M
C7
1NF
C5
10NF
C13
22UF
C14
22UF
R11
680R
C12
22UF
C6
10NF
C10
10UF
C11
10UF
R12
22K
P2
470K
R14
1K
R13
820K
T2
BC547
D2
1N4148
RL1
J8
RELE
E
J9
RELE-B3
J10
+300/600V-B3
T5
BU508
R23
100R
R24
12K
Z1
Z2
C16
470UF
R26
620K
R25
12K
J11
J12
Z3
Z4
100V
+600V
P3
470K
P4
470K
+600
+300
R27
51K
B2

Regenerierteil TR 850

OCC673

②

3

0CD559

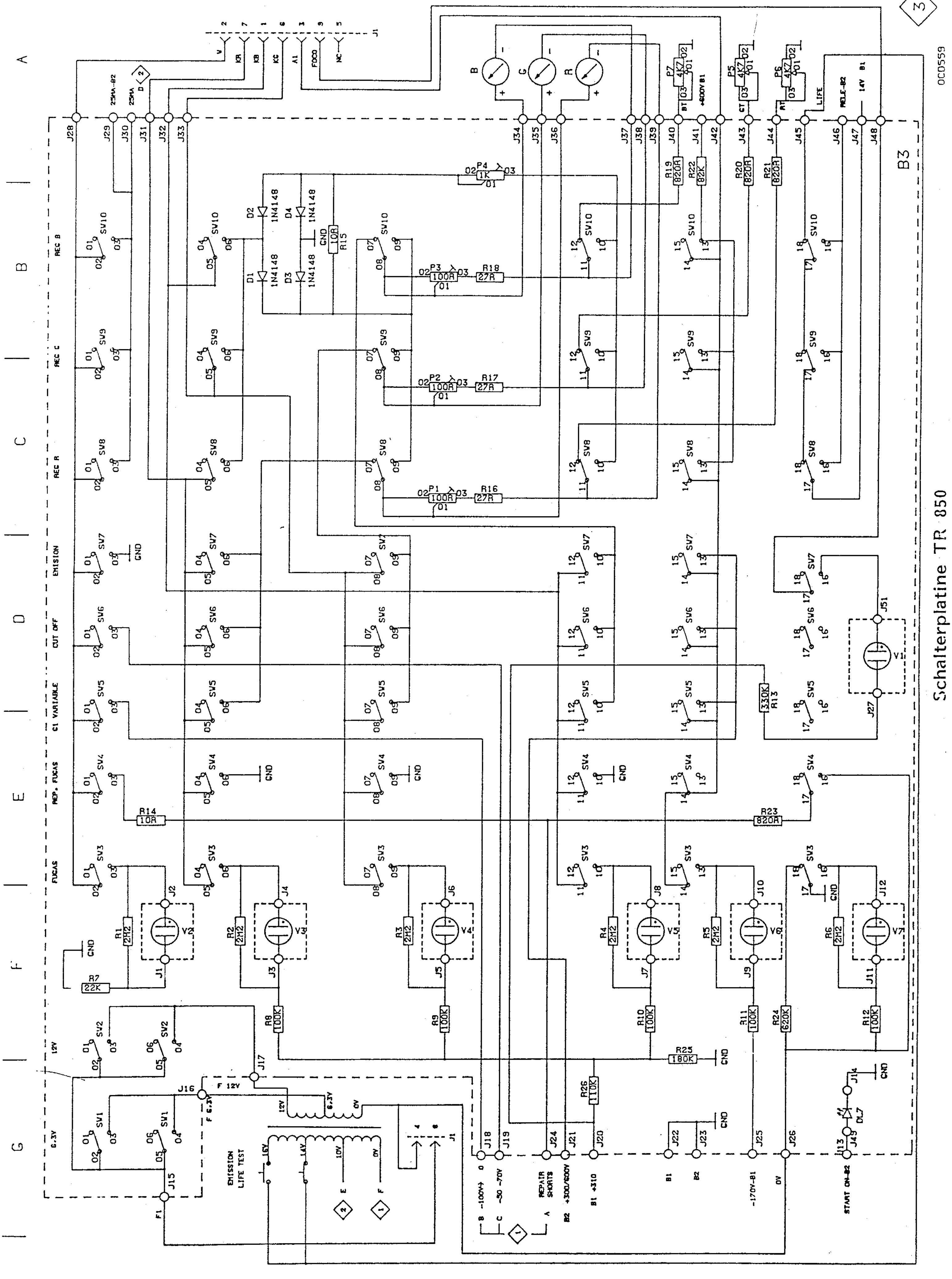
J1
2
7
1
6
3
9
5
V
KR
KB
KG
A1
FOCO
NC
25MA-B2
25MA
D
2
B
G
R
P7 4K7
P5 4K7
P6 4K7
BT
+600V B1
GT
RT
LIFE
MELE-B2
14V B1
J28
J29
J30
J31
J32
J33
J34
J35
J36
J37
J38
J39
J40
J41
J42
J43
J44
J45
J46
J47
J48
B3
R19 820R
R22 82K
R20 820R
R21 820R
P4 1K
D1 1N4148
D2 1N4148
D3 1N4148
D4 1N4148
R15 10R
GND
P3 100R
R18 27R
P2 100R
R17 27R
P1 100R
R16 27R
REC B
REC G
REC R
EMISION
CUT OFF
G1 VARIABLE
REP. FUCAS
FUCAS
12V
6,3V
SV1
SV2
SV3
SV4
SV5
SV6
SV7
SV8
SV9
SV10
R13 330K
J51
V1
J27
R14 10R
R23 820R
R1 2M2
R2 2M2
R3 2M2
R4 2M2
R5 2M2
R6 2M2
V2
V3
V4
V5
V6
V7
J2
J3
J4
J5
J6
J7
J8
J9
J10
J11
J12
R7 22K
R8 100K
R9 100K
R10 100K
R11 100K
R24 620K
R12 100K
R25 180K
R26 110K
J17
F 12V
J16
F 6,3V
12V
6,3V
0V
16V
14V
10V
0V
EMISSION LIFE TEST
E
F
J15
F1
J18
J19
J24
J21
J20
J22
J23
J25
J26
J13
J49
J14
DL7
B -100V+ 0
C -50 -70V
REPAIR SHORTS
A
B2 +300/600V
B1 +310
B1
B2
-170V-B1
0V
START ON-B2
1
2

Schalterplatine TR 850